Hurricane-QM57

EPIC Processor Board
Intel® Core™ i7 Processor

Features

- Intel Core i7 Processor, 2.53 GHz max.
- 8 GB DDR3 ECC RAM maximum. Supports rugged RSOMMs.
- 2 DisplayPorts, LVDS (dual channel)
- 2 x Gigabit LAN
- 10 x USB 2.0 host ports, 2 with extended power capability
- 4 x SATA with RAID support

Specifications

Board Format	EPIC Express, 115.00 x 165.00 mm
Processor	Intel Core i7 processor i7 – 620UE, 1.06 GHz, Dual Core I7 – 610E, 2.53 GHz, Dual Core
Chipset	Mobile Intel QM57 Express
RAM	8 GB DDR3 ECC RAM maximum - 2 GB soldered, prepared for 4 GB - 2 GB (prepared for 4 GB) XR-DIMM™ module optional
RAM Clock	DDR3 — 1066
Graphics	Intel HD Graphics. 2560 x 1920 pixels
DisplayPort	2 standard connectors
LVDS	Dual channel, up to 1600 x 1200 px - 18 bit - 24 bit
USB	6 x USB 2.0 host, external access with 2x "power USB", 1 A max. 4 x USB 2.0 host, internal only
Ethernet	2 x Gigabit LAN - Integrated in chipset, with 82577 PHY - Intel 82574
SATA	4 ports. Support for RAID 0, 1, 5, 10
Audio	- Optical SPDIF - Analog 7.1 (Azalia)
Watchdog	Yes (LEMT)
Status LED	HDD, power, power mode, SMC activity, 4x Ethernet, watchdog
MiniCard	Standard PCI Express MiniCard slot
PCI Express Bus	PCI/104-Express connector with - 4 x1 lanes (PCIe 1.0a) - 1 x16 lane, configurable as 2 x8 lanes (2.5Gbit/s, PCIe 2.0 compliant)
PCI Bus	PC/104-Plus
LPC Bus	Yes
SPI Bus	Yes
SMB Bus	Yes
RTC Backup	Integrated battery
Power Supply	ATX 1.3 compatible
Power Consumption	25 – 45 watts, depending on processor type
Cooling	Passive cooling possible Heatspreader available
MTBF	128 820 hours at 25 °C
Shock & Vibration	VITA 47-2005 V3 & OS tests approved
Operating temperature	0°C…+60°C (commercial, all versions) -20°C…+60°C (industrial, all versions) -40°C…+85°C (extended, optional)
BIOS	Phoenix BIOS BIOS parameters are saved in Flash
LEMT	Yes, Condition Monitoring
Supported OS	Windows, Linux

LiPPERT ADLINK TECHNOLOGY
Hans-Thoma-Str. 11 · D-68163 Mannheim
Phone +49 621 43214-0 · Fax +49 621 43214-30
sales@lippertembedded.com
www.lippertembedded.com

Ampro ADLINK Technology, Inc.
5215 Hellyer-Avenue, #110
San Jose, CA 95138, U.S.A.
Toll Free (800) 966 5200 · Fax (408) 360 0222
info@adlinktech.com

LiPPERT™ BY ADLINK

Hurricane-QM57

EPIC Processor Board
Intel® Core™ i7 Processor

Block Diagram

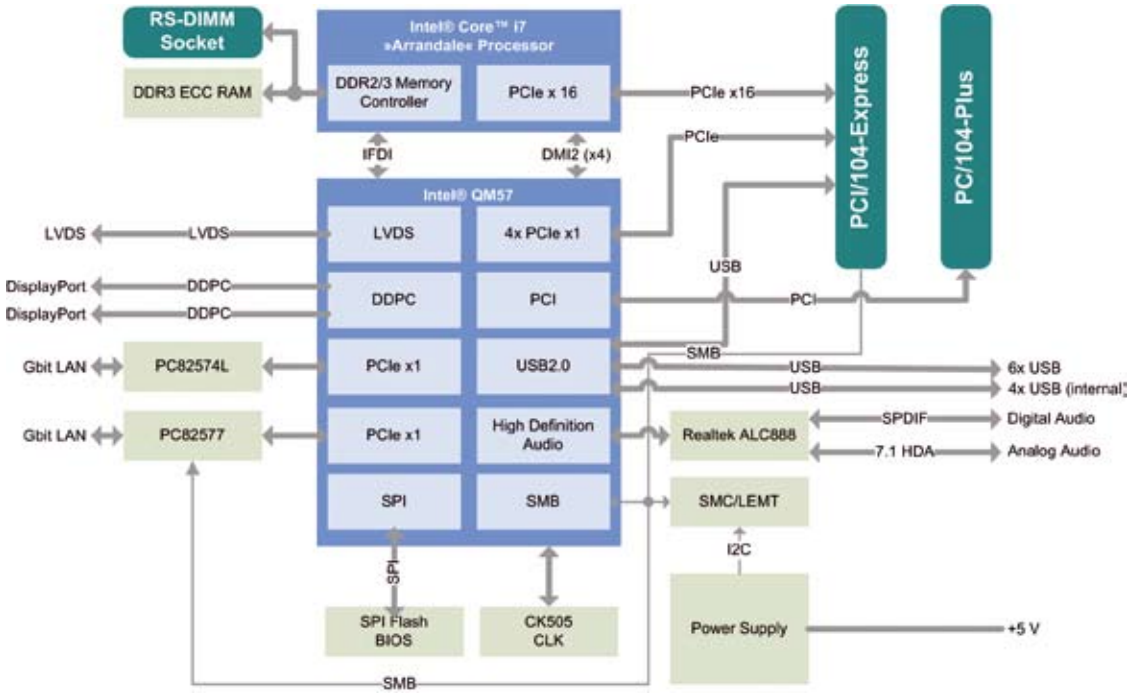

Accessoires

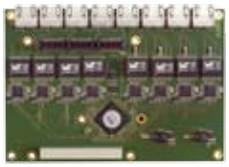

EXP-ETH8:
Eight 10/100/1000 Mb/s Ethernet ports in EPIC Express format

EXP-ISO-COM8:
Eight independent and flexibly configurable serial ports for RS232 / RS422 / RS485

Hurricane-QM57 with heat spreader, EXP-ETH8, and EXP-ISO-COM8

Ordering Information

Ordering Number	Description
t14-0006-10	EPIC CPU board with Intel Core i7-620UE, 1.06 GHz, dual core, 2 GB RAM, with heat spreader
t14-0007-10	EPIC CPU board with Intel Core i7-610E, 2.53 GHz, dual core, 2 GB RAM, with heat spreader
t14-0004-10	EPIC Express board with 8 Gigabit Ethernet ports
t14-0002-10	EPIC board with 8 galvanically isolated serial ports
t60-0027-10	RAM, unbuffered ECC, RSOMM, REVERSE, 2GB

Note: t denotes the temperature range. Use 7 for commercial, 8 for industrial and 9 for extended temperature range
Other processor and memory configurations are available on request.

02/12 · Specifications subject to change without notice · ©LiPPERT ADLINK TECHNOLOGY · Printed in Germany
All mentioned trademarks are the properties of their respective holders.

LiPPERT ADLINK TECHNOLOGY
Hans-Thoma-Str. 11 · D-68163 Mannheim
Phone +49 621 43214-0 · Fax +49 621 43214-30
sales@lippertembedded.com
www.lippertembedded.com

Ampro ADLINK Technology, Inc.
5215 Hellyer-Avenue, #110
San Jose, CA 95138, U.S.A.
Toll Free (800) 966 5200 · Fax (408) 360 0222
info@adlinktech.com

Distributor: NeoMore 23 rue des Poiriers F-78370 PLAISIR FRANCE +33 1 30 64 15 81 www.neomore.com